NIO-4RSL

4" Iolite Round Adjustable Slot Aperture
Source: 14W to 28W LED
800lm to 2500lm

Type
Project
Catalog No.
Notes

PRODUCT DESCRIPTION

4" Iolite LED downlights require a dedicated Iolite new construction or remodel housing. Adjustable slot aperture focus the beam spread through 2-⅝" x 2" opening.

FEATURES

- 800lm, 1000lm, 1500lm, 2000lm or 2500lm LED packages
- 2700K, 3000K, 3500K, 4000K, 5000K @ 90+ CRI
- Comfort Dim (warm dimming) also available
- Flood optic, narrow flood and spot optics (included)
- 5-Year limited warranty

SPECIFICATION

Construction: Trims are constructed of heat dissipating, die-cast aluminum. The aluminum die-cast LED heat sink is threaded to fit the trim and transfer heat.

Mounting: Luminaire includes friction blades to mount securely to housing.

OPTICS

800-1000lm: Three field changeable optics (spot, narrow flood and flood) are included with each LED module. Premium 10° TIR narrow spot optic assembly also available (Click Here for more information). Optional frosted and TIR optics are also available.
1500-2500lm: Three field changeable TIR optics (spot, narrow flood and flood) are included with each LED module.

ELECTRICAL

Lumens / Wattage: 800lm / 14W, 1000lm / 14W, 1500lm / 20W, 2000lm / 24W, 2500lm / 28W
Color Temperature: 2700K, 3000K, 3500K, 4000K, 5000K
Color Rendering Index: 90+CRI
Operating Temperature: Specified by housing
Lifetime: 50,000 hours @ L70
Comfort Dim: Comfort Dim color tunes the temperature from a bright 3100K (800lm) or 3000K (HL), to a romantic and comfortable 2000K on a gradual, even curve. Available in 800lm or HL (1500lm-2500lm).
Dimming: Specified by housing

COMPATIBLE HOUSINGS

Luminaires are compatible with respective Iolite housings manufactured by Nora Lighting.

CATALOG NO.	DESCRIPTION	LUMENS / WATTAGE
NHIOICD-48	ICAT New Construction	800-1000lm / 14W
NHIOICDCP-48	Chicago Plenum	800-1000lm / 14W
NHRIOIC-48	ICAT Remodel	800-1000lm / 14W
NHIOICD-415	ICAT New Construction	1500lm / 20W
NHIOICDCP-415	Chicago Plenum	1500lm / 20W
NHIOICD-420	ICAT New Construction	2000lm / 24W
NHIOICDCP-420	Chicago Plenum	2000lm / 24W
NHIOICD-425	ICAT New Construction	2500lm / 28W
NHIOICDCP-425	Chicago Plenum	2500lm / 28W

Accessories: Luminaires will accommodate (1) hex louver and (1) translucent deco collar or opaque snoot, no accessory holder is required, see accessories page. Flush mount mud ring is available to give the appearance of a trimless reflector, compatible with new construction housing only.

LABELS AND LISTINGS

- cULus Listed for Damp Locations
- 5-Year Limited Warranty
- RoHS Compliant
- Certified to the high efficacy requirements of California Title 24 JA8-2025

PRODUCT IMAGES & DIMENSIONS

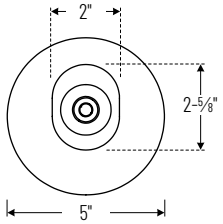

NIO-4RSL
Round Adjustable Slot Aperture
Adjustability:
New Construction: 40° (800-1000lm) / 25° (1500-2500lm)
Remodel: 25° (800-1000lm)



BB
Black Slot Aperture
Black Flange



BMPW
Black Slot Aperture
Bright White Flange



HZMPW
Haze Slot Aperture
Bright White Flange



MPW
Bright White Aperture
Bright White Flange

4" Iolite Round Adjustable Slot Aperture - Dedicated Housing Required

Color Temperature

- **NIO-4RSL50X** = 5000K*
- **NIO-4RSLCDX** = Comfort Dim†

- **NIO-4RSL27X** = 2700K
- **NIO-4RSL30X** = 3000K
- **NIO-4RSL35X** = 3500K
- **NIO-4RSL40X** = 4000K
- **NIO-4RSL50X** = 5000K
- **NIO-4RSLCDX** = Comfort Dim†

Finish

- **BB** = Black Slot Aperture / Black Flange
- **BMPW** = Black Slot Aperture / Bright White Flange
- **HZMPW** = Haze Slot Aperture / Bright White Flange
- **MPW** = Bright White Slot Aperture / Bright White Flange

Lumens / Wattage

- (blank) = 800lm / 14W

- **/10** = 1000lm / 14W
- **/HL** = 1500-2500lm (varies by housing)

* 5000K LED modules in 800lm are while supplies last
† 2" & 4" Comfort Dim uses a different dimming curve than 1" Iolite

Compatible Housings

Housing Type

- **NHIOICD-48** = ICAT New Construction / 800-1000lm / 14W
- **NHIOICDCP-48** = Chicago Plenum / 800-1000lm / 14W
- **NHRIOIC-48** = ICAT Remodel / 800-1000lm / 14W
- **NHIOICD-415** = ICAT New Construction / 1500lm / 20W
- **NHIOICDCP-415** = Chicago Plenum / 1500lm / 20W
- **NHIOICD-420** = ICAT New Construction / 2000lm / 24W
- **NHIOICDCP-420** = Chicago Plenum / 2000lm / 24W
- **NHIOICD-425** = ICAT New Construction / 2500lm / 28W
- **NHIOICDCP-425** = Chicago Plenum / 2500lm / 28W

Example: **NIO-4RSL50XBB** = 4" Iolite Round Adjustable Slot Aperture, 5000K, Black finish, 800lm

NORA LIGHTING
6505 Gayhart Street, Commerce, CA 90040
TEL 323.767.2600 | www.noralighting.com | e-mail: nora@noralighting.com
© 2026 Nora Lighting, Inc. All rights reserved. Specifications subject to change without notice.

4" Iolite Accessories

4" Iolite Round Adjustable Slot Aperture

Type	
Project	
Catalog No.	
Notes	

FIELD CHANGEABLE OPTICS

Iolite luminaires include spot, narrow flood and flood optics. Optics can be changed in the field by removing LED module from die-cast trim. Optional frosted and TIR optics are also available.
Note: Frosted and Premium TIR optics are not compatible with /HL LED modules.

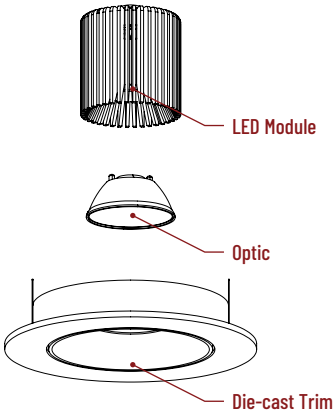



Frosted Optics

NIO-REFL38FR	60° Optic
NIO-REFL60FR	73° Optic

Not compatible with /HL LED module.



Premium TIR Optics

NIO-REFLTIR15	22° Optic
NIO-REFLTIR25	26° Optic

Not compatible with /HL, Comfort Dim (CDX) LED modules or Hex Cell Louver.



10° TIR Optic Assembly

Specialized narrow spot LED module assembly is also available. Requires LE4 housing, Click Here for more information.

ACCESSORIES

Iolite accessories can be added at any point in the design process. Accessories easily install between LED module and die-cast trim.
Luminaire will accommodate (1) hex louver and (1) collar accessory, no accessory holder required.

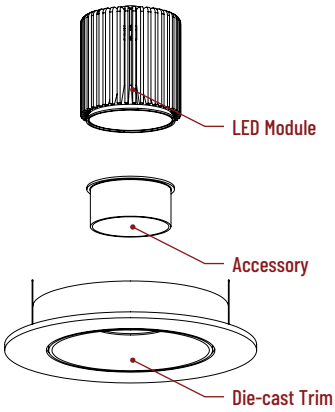



Translucent Decorative Collar

NIO-AS14(color)	⅝" length
NIO-AS19(color)	¾" length
NIO-AS26(color)	1" length

Color:
AM (amber), **BLU** (blue), **FR** (frosted), **R** (red)

Translucent collars color the aperture with the specified color while producing white general light. Collars are available in different lengths. Use to add interest, create a theme, match a theme or define a space.



Opaque Collar Snoot

NIO-AS14(color)	⅝" length
NIO-AS19(color)	¾" length
NIO-AS26(color)	1" length

Color:
MPW (matte powder white), **WH** (white)

Opaque snoot greatly reduces aperture brightness while preserving light output.

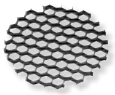

Hex Cell Louver

NIO-HC	Black

Hex cell louver subtly reduces aperture brightness by reducing light output by about 50%.

Hex cell louver is not compatible with TIR optics.

FLUSH MOUNT

4" Iolite trims can be installed flush with the drywall for a flush mount appearance. A flush mount mud ring is installed after the drywall and a professional drywall finisher floats the ceiling to blend in the mud ring.



Flush Mount Mud Ring

NIO-FMMR-4R	Round Mud Ring

Mounts reflector flush to ceiling with flange visible. Mud ring attaches to drywall. **Only for use with NHIOICD-48 or NHIOICDCP-48 new construction housings and NIO-4R trims.**
Dimensions: 7-⅛" diameter ½" thick

NORA LIGHTING
6505 Gayhart Street, Commerce, CA 90040
TEL 323.767.2600 | www.noralighting.com | e-mail: nora@noralighting.com
© 2026 Nora Lighting, Inc. All rights reserved. Specifications subject to change without notice.